Work Order ID 69871

Tuesday, May 24, 2011 8:24:33 AM

SHIP 20/09

Item ID: D350-591-133 **Accept** **Setup Start** **Stop**

Revision ID:

Item Name: Aft Maintenance Step

Start Date: 5/24/2011 **Start Qty:** 8.00 **Cust Item ID:**

Required Date: 5/30/2011 **Req'd Qty:** 8.00 **Customer:**

Reference:

Approvals: **Process Plan:** ___ **Date:** 11-05-24 **Tooling:** ___ **Date:** ___ **Run Start** **Stop**

QC: ___ **Date:** ___ **SPC (Y/N):** ___ **Date:** ___

Draw Nbr	Revision Nbr
D2946	Rev B

Sequence ID/ Work Center ID	Operation Description	Set Up/ Run Hours	Tool ID	Tool #	Plan Code	Accept Qty	Reject Qty	Reject Number	Insp. Stamp
100	DOCUMENT CONTROL	0.00							
DC	**Memo**	0.00							
Document Control	Photocopy bluefile and type labels as per PPP D350-591-133 CHG003		Subcon						
110	Large Fab	0.00							
Large Fab	**Memo**	0.00							
Large Fab	1-Cut D2622-120 extrusion to 62.06" long as per Dwg D2946 2-Deburr **Ensure that 57.09" minimum extrusion is kept and identify to be used for D350-591-215/-216.**		11.06.10			8	∅		

Cor CL 11-6-17

Dart Aerospace Ltd

W/O:		WORK ORDER CHANGES					
DATE	STEP	PROCEDURE CHANGE	By	Date	Qty	Approval Chief Eng / Prod Mgr	Approval QC Inspector

Part No: _____ **PAR #:** _____ **Fault Category:** _____ **NCR:** Yes No **DQA:** _____ **Date:** _____

Resolution: _____ **Disposition:** _____ **QA: N/C Closed:** _____ **Date:** _____

NCR:		WORK ORDER NON-CONFORMANCE (NCR)						
DATE	STEP	Description of NC Section A	Corrective Action Section B			Verification Section C	Approval Chief Eng	Approval QC Inspector
			Initial Chief Eng	Action Description Chief Eng	Sign & Date			

NOTE: Date & initial all entries

Work Order ID 69871

Tuesday, May 24, 2011 8:24:33 AM

Item ID: D350-591-133 **Accept** **Setup Start** **Stop**

Revision ID:

Item Name: Aft Maintenance Step

Start Date: 5/24/2011 **Start Qty:** 8.00 **Cust Item ID:**

Required Date: 5/30/2011 **Req'd Qty:** 8.00 **Customer:**

Reference:

Run Start **Stop**

Approvals: **Process Plan:** _____ **Date:** _____ **Tooling:** _____ **Date:** _____

QC: _____ **Date:** _____ **SPC (Y/N):** _____ **Date:** _____

Sequence ID/ Work Center ID	Operation Description	Set Up/ Run Hours	Tool ID	Tool #	Plan Code	Accept Qty	Reject Qty	Reject Number	Insp. Stamp
120	~~QC5~~- Inspect part completeness to step on W/O QC6	0.00				8	Ø		PTo
QC Quality Control	QC **Memo**	0.00							
130		0.00							
Large Fab	Large Fab					8	Ø		
Large Fab	**Memo**	0.00							
	1-Deburr and Bevel ends for welding								
	2-Weld (1) End Cap and (2) Lugs using Jig DT8440 as per Dwg D2946 A/RAluminum Rod M114703 M115928								
	3-Grind End Cap welds flush								
140	QC9- Inspect visual per QSI004- Fusion Welds	0.00				8	Ø	BE11/06/14	
QC Quality Control	**Memo**	0.00							

11.04.14

Dart Aerospace Ltd

W/O: 69871	Rem C#6	WORK ORDER CHANGES					
DATE	**STEP**	**PROCEDURE CHANGE**	**By**	**Date**	**Qty**	**Approval** Chief Eng / Prod Mgr	**Approval** QC Inspector
11.06.13	120	Change To QC 6	RpC 11.06.13	11.06.13	N/A	N/A	

Part No: _____ **PAR #:** _____ **Fault Category:** _____ **NCR:** Yes No **DQA:** _____ **Date:** _____

Resolution: _____ **Disposition:** _____ **QA: N/C Closed:** _____ **Date:** _____

NCR:	WORK ORDER NON-CONFORMANCE (NCR)							
DATE	**STEP**	**Description of NC** Section A	**Corrective Action** Section B			**Verification** Section C	**Approval** Chief Eng	**Approval** QC Inspector
			Initial Chief Eng	**Action Description** Chief Eng	**Sign & Date**			

NOTE: Date & initial all entries

H:\fFORMS\Quality Assurance\approved QA\NCRWO RevE

Work Order ID 69871

Tuesday, May 24, 2011 8:24:33 AM

Item ID: D350-591-133 **Accept** **Setup Start** **Stop**

Revision ID:

Item Name: Aft Maintenance Step

Start Date: 5/24/2011 **Start Qty:** 8.00 **Cust Item ID:**

Required Date: 5/30/2011 **Req'd Qty:** 8.00 **Customer:**

Reference:

Approvals: **Process Plan:** _____ **Date:** _____ **Tooling:** _____ **Date:** _____ **Run Start** **Stop**

QC: _____ **Date:** _____ **SPC (Y/N):** _____ **Date:** _____

Sequence ID/ Work Center ID	Operation Description	Set Up/ Run Hours	Tool ID	Tool #	Plan Code	Accept Qty	Reject Qty	Reject Number	Insp. Stamp
150 QC Quality Control	QC5- Inspect part completeness to step on W/O	0.00				6			
	Memo	0.00							
160 HandFinish Hand Finishing	Chemical Conversion Coat per QSI005 4.1	0.00				6			
	Memo	0.00							
170 QC Quality Control	QC3- Inspect Part Finish	0.00				6			
	Memo	0.00							

Dart Aerospace Ltd

W/O:		WORK ORDER CHANGES					
DATE	STEP	PROCEDURE CHANGE	By	Date	Qty	Approval Chief Eng / Prod Mgr	Approval QC Inspector

Part No: _____ **PAR #:** _____ **Fault Category:** _____ **NCR:** Yes No **DQA:** _____ **Date:** _____

Resolution: _____ **Disposition:** _____ **QA: N/C Closed:** _____ **Date:** _____

NCR:		WORK ORDER NON-CONFORMANCE (NCR)						
DATE	STEP	Description of NC Section A	Corrective Action Section B			Verification Section C	Approval Chief Eng	Approval QC Inspector
			Initial Chief Eng	Action Description Chief Eng	Sign & Date			

NOTE: Date & initial all entries

H:\fFORMS\Quality Assurance\approved QA\NCRWO RevE

Work Order ID 69871

Tuesday, May 24, 2011 8:24:33 AM

Item ID: D350-591-133 **Accept** **Setup Start** **Stop**

Revision ID:

Item Name: Aft Maintenance Step

Start Date: 5/24/2011 **Start Qty:** 8.00 **Cust Item ID:**

Required Date: 5/30/2011 **Req'd Qty:** 8.00 **Customer:**

Reference:

Approvals: **Process Plan:** _____ **Date:** _____ **Tooling:** _____ **Date:** _____ **Run Start** **Stop**

QC: _____ **Date:** _____ **SPC (Y/N):** _____ **Date:** _____

Sequence ID/ Work Center ID	Operation Description	Set Up/ Run Hours	Tool ID	Tool #	Plan Code	Accept Qty	Reject Qty	Reject Number	Insp. Stamp
180	Large Fab	0.00							
Large Fab						8	∅		
Large Fab	**Memo**	0.00	11-06-15						
	Remove alodine prior to welding. Weld end cap as per Dwg D2946. Grind end cap weld flush. A/R AL ROD BATCH: M114703		AE 11.06.15.						
190	QC10- Inspect visual per QSI004- ground welds	0.00							
QC	**Memo**	0.00	S 11/06/16						
Quality Control									
200	QC5- Inspect part completeness to step on W/O	0.00							
QC	**Memo**	0.00	S 11/06/16			8			
Quality Control									

Dart Aerospace Ltd

W/O:		WORK ORDER CHANGES					
DATE	STEP	PROCEDURE CHANGE	By	Date	Qty	Approval Chief Eng / Prod Mgr	Approval QC Inspector

Part No: _____ **PAR #:** _____ **Fault Category:** _____ **NCR:** Yes No **DQA:** _____ **Date:** _____

Resolution: _____ **Disposition:** _____ **QA: N/C Closed:** _____ **Date:** _____

NCR:		WORK ORDER NON-CONFORMANCE (NCR)						
DATE	STEP	Description of NC Section A	Corrective Action Section B			Verification Section C	Approval Chief Eng	Approval QC Inspector
			Initial Chief Eng	Action Description Chief Eng	Sign & Date			

NOTE: Date & initial all entries

H:\fFORMS\Quality Assurance\approved QA\NCRWO RevE

Work Order ID 69871

Tuesday, May 24, 2011 8:24:33 AM

Item ID: D350-591-133 **Accept** **Setup Start**

Revision ID: **Stop**

Item Name: Aft Maintenance Step

Start Date: 5/24/2011 **Start Qty:** 8.00 **Cust Item ID:**

Required Date: 5/30/2011 **Req'd Qty:** 8.00 **Customer:**

Reference:

Approvals: **Process Plan:** _____ **Date:** _____ **Tooling:** _____ **Date:** _____ **Run Start**

QC: _____ **Date:** _____ **SPC (Y/N):** _____ **Date:** _____ **Stop**

Sequence ID/ Work Center ID	Operation Description	Set Up/ Run Hours	Tool ID	Tool #	Plan Code	Accept Qty	Reject Qty	Reject Number	Insp. Stamp
210	Chemical Conversion Coat per QSI005 4.1	0.00							
HandFinish	Memo	0.00							
Hand Finishing									

8x Ø M-f 11/06/16

220	White Gloss(Ref:4.3.5.1) per QSI005 4.3-Alum	0.00							
Powdercoat	Memo	0.00							
Powder Coating	START TIME: 8:15								
M116964	OVEN TEMPERATURE: 320 °F								
	FINISH TIME: 8:45								

8x Ø M-f 11/06/17

230	Wing Walk as per dwg QSI005 4.4 Batch 117863	0.00							
HandFinish	Memo	0.00							
Hand Finishing									

8 Ø BL 11-6-17.

Dart Aerospace Ltd

W/O:		WORK ORDER CHANGES					
DATE	STEP	PROCEDURE CHANGE	By	Date	Qty	Approval Chief Eng / Prod Mgr	Approval QC Inspector

Part No: _____ **PAR #:** _____ **Fault Category:** _____ **NCR:** Yes No **DQA:** _____ **Date:** _____

Resolution: _____ **Disposition:** _____ **QA: N/C Closed:** _____ **Date:** _____

NCR:		WORK ORDER NON-CONFORMANCE (NCR)						
DATE	STEP	Description of NC Section A	Corrective Action Section B			Verification Section C	Approval Chief Eng	Approval QC Inspector
			Initial Chief Eng	Action Description Chief Eng	Sign & Date			

NOTE: Date & initial all entries

H:\fFORMS\Quality Assurance\approved QA\NCRWO RevE

Work Order ID 69871

Tuesday, May 24, 2011 8:24:33 AM

Item ID: D350-591-133 **Accept** **Setup Start**

Revision ID: **Stop**

Item Name: Aft Maintenance Step

Start Date: 5/24/2011 **Start Qty:** 8.00 **Cust Item ID:**

Required Date: 5/30/2011 **Req'd Qty:** 8.00 **Customer:**

Reference:

Approvals: **Process Plan:** _____ **Date:** _____ **Tooling:** _____ **Date:** _____ **Run Start**

QC: _____ **Date:** _____ **SPC (Y/N):** _____ **Date:** _____ **Stop**

Sequence ID/ Work Center ID	Operation Description	Set Up/ Run Hours	Tool ID	Tool #	Plan Code	Accept Qty	Reject Qty	Reject Number	Insp. Stamp
240	QC3- Inspect Part Finish	0.00				8	ϕ		11/06/17
QC	Memo	0.00							
Quality Control									
250	Pick Kit	0.00				11/6/17		82	
Packaging	Memo	0.00							
Packaging									
260	QC4- 100% Inspect kits for completeness	0.00				8			
QC	Memo	0.00							
Quality Control									

Dart Aerospace Ltd

W/O:		WORK ORDER CHANGES					
DATE	STEP	PROCEDURE CHANGE	By	Date	Qty	Approval Chief Eng / Prod Mgr	Approval QC Inspector

Part No: _____ **PAR #:** _____ **Fault Category:** _____ **NCR:** Yes No **DQA:** _____ **Date:** _____

Resolution: _____ **Disposition:** _____ **QA: N/C Closed:** _____ **Date:** _____

NCR:		WORK ORDER NON-CONFORMANCE (NCR)						
DATE	STEP	Description of NC Section A	Corrective Action Section B			Verification Section C	Approval Chief Eng	Approval QC Inspector
			Initial Chief Eng	Action Description Chief Eng	Sign & Date			

NOTE: Date & initial all entries

H:\fFORMS\Quality Assurance\approved QA\NCRWO RevE

Work Order ID 69871

Tuesday, May 24, 2011 8:24:33 AM

Item ID: D350-591-133 **Accept** **Setup Start** **Stop**

Revision ID:

Item Name: Aft Maintenance Step

Start Date: 5/24/2011 **Start Qty:** 8.00 **Cust Item ID:**

Required Date: 5/30/2011 **Req'd Qty:** 8.00 **Customer:**

Reference:

Run Start **Stop**

Approvals: **Process Plan:** _____ **Date:** _____ **Tooling:** _____ **Date:** _____

QC: _____ **Date:** _____ **SPC (Y/N):** _____ **Date:** _____

Sequence ID/ Work Center ID	Operation Description	Set Up/ Run Hours	Tool ID	Tool #	Plan Code	Accept Qty	Reject Qty	Reject Number	Insp. Stamp
270	Packaging	0.00							
Packaging	**Memo**	0.00					11/6/21		
Packaging	Identify and pack for shipping as per PPPD350-591-133 Location:_____ PPP Rev:_____								
280	QC21- Final Inspection - Work Order Release	0.00					11/6/21		
QC	**Memo**	0.00							
Quality Control									

11-06-21.

Dart Aerospace Ltd

W/O:		WORK ORDER CHANGES					
DATE	STEP	PROCEDURE CHANGE	By	Date	Qty	Approval Chief Eng / Prod Mgr	Approval QC Inspector

Part No: _____ **PAR #:** _____ **Fault Category:** _____ **NCR:** Yes No **DQA:** _____ **Date:** _____

Resolution: _____ **Disposition:** _____ **QA: N/C Closed:** _____ **Date:** _____

NCR:		WORK ORDER NON-CONFORMANCE (NCR)						
DATE	STEP	Description of NC Section A	Corrective Action Section B			Verification Section C	Approval Chief Eng	Approval QC Inspector
			Initial Chief Eng	Action Description Chief Eng	Sign & Date			

NOTE: Date & initial all entries

H:\fFORMS\Quality Assurance\approved QA\NCRWO RevE

Picklist Print

Tuesday, May 24, 2011 8:24:40 AM

4

Work Order ID: 69871

Parent Item: D350-591-133

Parent Item Name: Aft Maintenance Step

Start Date: 5/24/2011 **Required Date:** 5/30/2011

Start Qty: 8.00 **Required Qty:** 8.00

Comments: IPP Rev:B□05.10.14□Modified step 10□KJ/EC
IPP Rev:B□06.07.19□D2946 @ rev.b EC

Component Item ID/ Item Name	Replacement Item ID	Mfg/ Purch	Bin Item	Primary Location	Last Location	Route Seq ID	Unit of Measure	Qty on Hand	Qty per Kit	Total Qty	Qty Issued	Date Issued	Status
D2622-120C Step Extrusion		Manufactured	No			110	Each	64.0000	0.52	4.16	11·06·10		
				Location			**Loc Qty**		**Loc Code**				
				HALL			6						
					64409		6						
				WA			58						
					46910		2						
					66970		56			x4			
D2734 Step End Plate		Manufactured	No			130	Each	68.0000	2	16	11·06·13		
				Location			**Loc Qty**		**Loc Code**				
				WA			45						
					69537		45			8+8			
				WA015			23						
					66143		23						
D2944 Step Mounting Plate		Manufactured	No			130	Each	22.0000	2	16	11·06·13		
				Location			**Loc Qty**		**Loc Code**				
				WA018			22						
					64082		5			5			
					66177		17			11			

Dart Aerospace Ltd

W/O:		WORK ORDER CHANGES					
DATE	STEP	PROCEDURE CHANGE	By	Date	Qty	Approval Chief Eng / Prod Mgr	Approval QC Inspector

Part No: _____ **PAR #:** _____ **Fault Category:** _____ **NCR:** Yes No **DQA:** _____ **Date:** _____

Resolution: _____ **Disposition:** _____ **QA: N/C Closed:** _____ **Date:** _____

NCR:		WORK ORDER NON-CONFORMANCE (NCR)						
DATE	STEP	Description of NC Section A	Corrective Action Section B			Verification Section C	Approval Chief Eng	Approval QC Inspector
			Initial Chief Eng	Action Description Chief Eng	Sign & Date			

NOTE: Date & initial all entries

H:\fFORMS\Quality Assurance\approved QA\NCRWO RevE

Picklist Print

Tuesday, May 24, 2011 8:24:40 AM

Work Order ID: 69871

Parent Item: D350-591-133

Parent Item Name: Aft Maintenance Step

Start Date: 5/24/2011 **Required Date:** 5/30/2011

Start Qty: 8.00 **Required Qty:** 8.00

AN4-11A Bolt	Purchased	No	250	Each	198.0000	4	32	

Location	Loc Qty	Loc Code
ST357	198	
110382	1	
115316	197	

AN4-14A Bolt	Purchased	No	250	Each	244.0000	8	64	

Location	Loc Qty	Loc Code
ST357	109	
114752	5	
116914	4	
117619	100	
ST358	135	
117313	135	

AN4-16A Bolt	Purchased	No	250	Each	168.0000	8	64	

Location	Loc Qty	Loc Code
ST358	168	
116400	68	
117514	100	

Dart Aerospace Ltd

W/O:		WORK ORDER CHANGES					
DATE	STEP	PROCEDURE CHANGE	By	Date	Qty	Approval Chief Eng / Prod Mgr	Approval QC Inspector

Part No: _____ **PAR #:** _____ **Fault Category:** _____ **NCR:** Yes No **DQA:** _____ **Date:** _____

Resolution: _____ **Disposition:** _____ **QA: N/C Closed:** _____ **Date:** _____

NCR:		WORK ORDER NON-CONFORMANCE (NCR)						
DATE	STEP	Description of NC Section A	Corrective Action Section B			Verification Section C	Approval Chief Eng	Approval QC Inspector
			Initial Chief Eng	Action Description Chief Eng	Sign & Date			

NOTE: Date & initial all entries

H:\fFORMS\Quality Assurance\approved QA\NCRWO RevE

Picklist Print

Tuesday, May 24, 2011 8:24:40 AM

Work Order ID: 69871

Parent Item: D350-591-133

Parent Item Name: Aft Maintenance Step

Start Date: 5/24/2011 **Required Date:** 5/30/2011

Start Qty: 8.00 **Required Qty:** 8.00

AN4-7A		Purchased	No	250	Each	273.0000	2	16	
Bolt									

Location	Loc Qty	Loc Code	
ST356	273		
115373	23		2
117443	50		12
117514	200		

AN960JD416	NAS1149D0463J	Purchased	No	250	Each	0.0000	14	112	M117460
Washer									
D2230-1		Manufactured	No	250	Each	80.0000	4	32 2x	B69179
Lug									

Location	Loc Qty	Loc Code	
ST476	80		
67761	72		30
67826	8		

D2230-3		Manufactured	No	250	Each	210.0000	4	32	8x B69820 11/6/21
Lug									

Location	Loc Qty	Loc Code	
Return 2010	4		
62927	2		
63544	2		
ST476	206		
65050	46		
68246	160		18

Dart Aerospace Ltd

W/O:		WORK ORDER CHANGES					
DATE	STEP	PROCEDURE CHANGE	By	Date	Qty	Approval Chief Eng / Prod Mgr	Approval QC Inspector

Part No: _____ **PAR #:** _____ **Fault Category:** _____ **NCR:** Yes No **DQA:** _____ **Date:** _____

Resolution: _____ **Disposition:** _____ **QA: N/C Closed:** _____ **Date:** _____

NCR:		WORK ORDER NON-CONFORMANCE (NCR)						
DATE	STEP	Description of NC Section A	Corrective Action Section B			Verification Section C	Approval Chief Eng	Approval QC Inspector
			Initial Chief Eng	Action Description Chief Eng	Sign & Date			

NOTE: Date & initial all entries

H:\fFORMS\Quality Assurance\approved QA\NCRWO RevE

Picklist Print

Tuesday, May 24, 2011 8:24:41 AM

Work Order ID: 69871

Parent Item: D350-591-133

Parent Item Name: Aft Maintenance Step

Start Date: 5/24/2011 **Required Date:** 5/30/2011

Start Qty: 8.00 **Required Qty:** 8.00

D2732	Manufactured	No	250	f	262.3281	2	16	
Rubber Extrusion								

Location	Loc Qty	Loc Code
ST410	262.32811	
64283	262.32811	

cut (8) at 3.00"

D2856-400	Manufactured	No	250	f	167.2696	1.26	10.08	
Abraison Strip								

Location	Loc Qty	Loc Code
ST403	166.6	
68076	166.6	
ST409	0.6696	
63735	0.6696	

(2X) 4.00" X 7.20" per dwg

D2945	Manufactured	No	250	Each	0.0000	1	8	
Step Mounting Plate								
MS21042L4	Purchased	No	250	Each	4,716.000	14	112	
Nut								

Location	Loc Qty	Loc Code
ST300	4716	
116823	916	
117441	3000	
117601	800	

Dart Aerospace Ltd

W/O:		WORK ORDER CHANGES					
DATE	STEP	PROCEDURE CHANGE	By	Date	Qty	Approval Chief Eng / Prod Mgr	Approval QC Inspector

Part No: _____ **PAR #:** _____ **Fault Category:** _____ **NCR:** Yes No **DQA:** _____ **Date:** _____

Resolution: _____ **Disposition:** _____ **QA: N/C Closed:** _____ **Date:** _____

NCR:		WORK ORDER NON-CONFORMANCE (NCR)						
DATE	STEP	Description of NC Section A	Corrective Action Section B			Verification Section C	Approval Chief Eng	Approval QC Inspector
			Initial Chief Eng	Action Description Chief Eng	Sign & Date			

NOTE: Date & initial all entries

H:\fFORMS\Quality Assurance\approved QA\NCRWO RevE

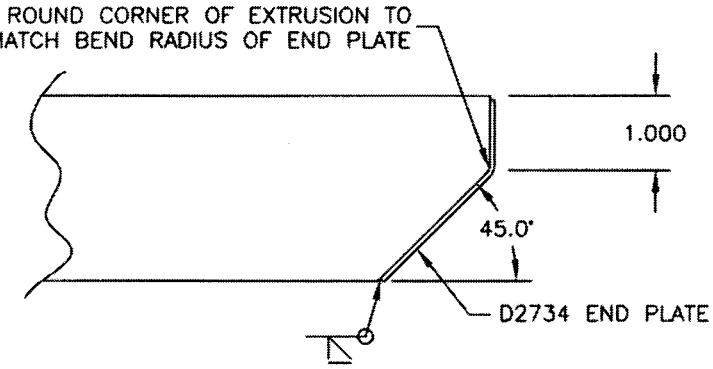

TYPICAL STEP END DETAIL
NOT TO SCALE

D2946 STEP ASSEMBLY PARTS LIST

Part No.	Description	QTY
D2946	Step Assembly	X
D2622-63	STEP EXTRUSION*	1
D2734	END PLATE	2
D2944	STEP MOUNTING PLATE	2

*cut per drawing

NOTE: ALL WELDS SHALL BE 100% VISUALLY INSPECTED BY A QUALIFIED INSPECTOR PER DART QSI 004

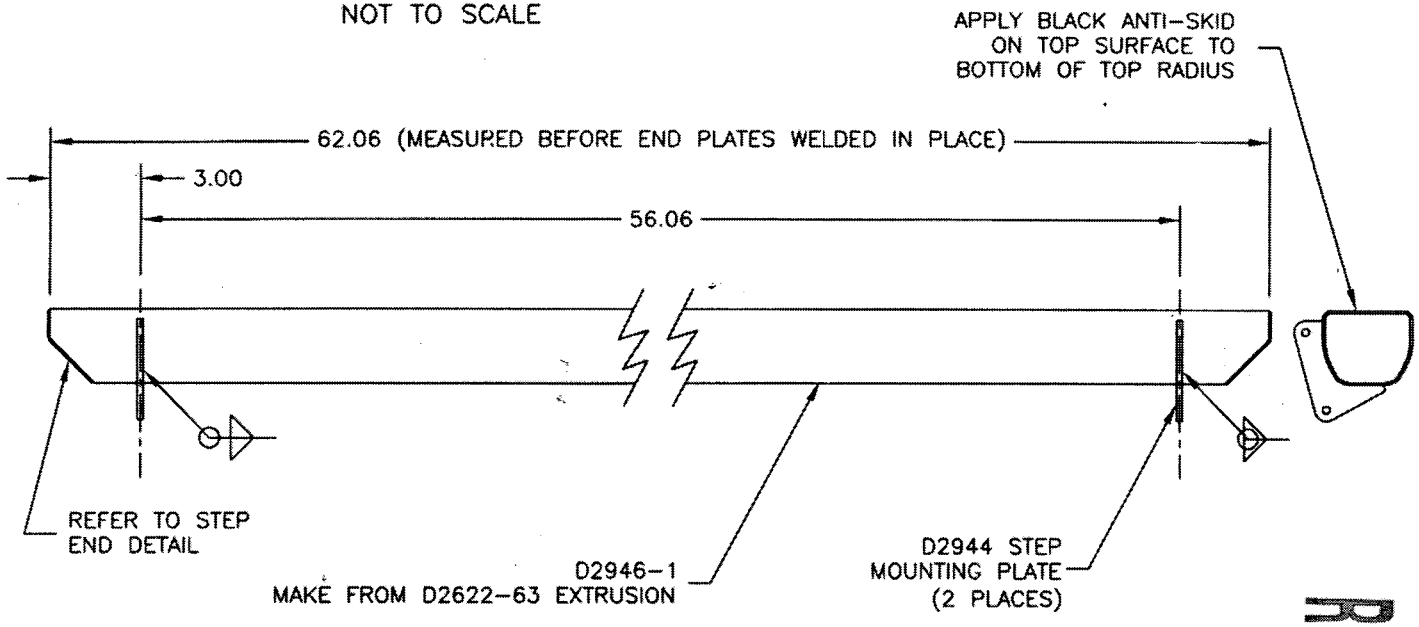

D2946-041 STEP ASSEMBLY

D2946 STEP ASSEMBLY

1) MAKE FROM D2622 STEP EXTRUSION
2) WELD PER DART QSI 004
3) FINISH: CHEMICAL CONVERSION COAT PER DART QSI 005 4.1
   POWDER COAT ENTIRE ASSEMBLY WHITE (4.3.5.1) PER DART QSI 005 4.3
   BLACK ANTI-SKID PAINT PER DART QSI 005 4.4
4) ALL DIMENSIONS ARE IN INCHES
5) TOLERANCES ARE PER DART QSI 018 UNLESS OTHERWISE NOTED

RELEASED 05.11.28

A	99.12.13	NEW ISSUE
B	05.11.14	UPDATE FINISHING NOTE

DESIGN: CP
DRAWN BY: PH
CHECKED: [illegible]
APPROVED: [illegible]
DATE: 05.11.14

DART AEROSPACE LTD
HAWKESBURY, ONTARIO, CANADA

DRAWING NO. D2946
TITLE: STEP ASSEMBLY
REV. B
SHEET 1 OF 1
SCALE 1:6

SHOP COPY
RETAINED
ENGINEERING
UNCONTROLLED COPY
SUBJECT TO AMENDMENT
WITHOUT NOTICE
WORK ORDER
NO. 69871
PH 11-05-29

THIS DOCUMENT IS PRIVATE AND CONFIDENTIAL AND IS SUPPLIED ON THE EXPRESS CONDITION THAT IT IS NOT TO BE USED FOR ANY PURPOSE OR COPIED OR COMMUNICATED TO ANY OTHER PERSON WITHOUT WRITTEN PERMISSION FROM DART AEROSPACE LTD.

Copyright © 1999 by DART AEROSPACE LTD

Dart Aerospace Ltd

W/O:		WORK ORDER CHANGES					
DATE	STEP	PROCEDURE CHANGE	By	Date	Qty	Approval Chief Eng / Prod Mgr	Approval QC Inspector

Part No: _____ **PAR #:** _____ **Fault Category:** _____ **NCR:** Yes No **DQA:** _____ **Date:** _____

Resolution: _____ **Disposition:** _____ **QA: N/C Closed:** _____ **Date:** _____

NCR:		WORK ORDER NON-CONFORMANCE (NCR)						
DATE	STEP	Description of NC Section A	Corrective Action Section B			Verification Section C	Approval Chief Eng	Approval QC Inspector
			Initial Chief Eng	Action Description Chief Eng	Sign & Date			

NOTE: Date & initial all entries

H:\fFORMS\Quality Assurance\approved QA\NCRWO RevE

5. PARTS LIST

Qty -111A	Qty -113	Qty -115	Qty -117A	Qty -119	Qty -133	Part Number	Description
X						D350-591-111A	***Heli-Access-Step*** ™, Long Step – High Skid
	X					D350-591-113	***Heli-Access-Step*** ™, Short Step – High Skid
		X				D350-591-115	***Heli-Access-Step*** ™, Short Step – Low Skid
			X			D350-591-117A	***Heli-Access-Step*** ™, Pre-Flight Step
				X		D350-591-119	***Heli-Access-Step*** ™, Long Step – Low Skid
					X	D350-591-133	***Heli-Access-Step*** ™, Aft Maintenance Step
	1					D2310	STEP ASSEMBLY (HIGH-SHORT)
1						D2311	STEP ASSEMBLY (HIGH-LONG)
		1				D2354	STEP ASSEMBLY (LOW-SHORT)
				1		D2355	STEP ASSEMBLY (LOW-LONG)
					1	D2946-041	STEP ASSEMBLY (MAINTENANCE)
4	2	2	2	2		D2171	CLAMP
4	2	2	2	2		D2182B035	CUSHION
					4	D2230-1	MOUNTING LUG
					4	D2230-3	MOUNTING LUG
8	4	4	4	4		D2274	RADIUS BLOCK
			1			D2362-041	SUPPORT BRACKET
2	1			1		D2362-3	SUPPORT BRACKET
		1				D2362-5	SUPPORT BRACKET
2	1	1	1	1	2	D2856-400-720	ABRASION STRIP
					1	D2945	MOUNTING PLATE
2	2	2		2		AN3-37A	BOLT
					2	AN4-7A	BOLT
					4	AN4-11A	BOLT
					8	AN4-14A	BOLT
		4				AN4-16A	BOLT
8	4			4		AN4-20A	BOLT
1	1	1	4	1		AN4-22A	BOLT
4	4	4		4		AN960JD10	WASHER
10	6	2	4	6	14	AN960JD416	WASHER
		4				AN960JD416L	WASHER
2	2	2		2		MS21042L3	NUT
9	5	5	4	5	14	MS21042L4	NUT

Qty -121	Qty -122	Qty -123	Qty -124	Part Number	Description
X				D350-591-121	***Heli-Access-Step*** ™, Short Step – High Skid, LH
	X			D350-591-122	***Heli-Access-Step*** ™, Short Step – High Skid, RH
		X		D350-591-123	***Heli-Access-Step*** ™, Short Step – Low Skid, LH
			X	D350-591-124	***Heli-Access-Step*** ™, Short Step – Low Skid, RH
1				D2351-041	STEP ASSEMBLY (HIGH-SHORT, LH)
	1			D2351-042	STEP ASSEMBLY (HIGH-SHORT, RH)
		1		D2356-041	STEP ASSEMBLY (LOW-SHORT, LH)
			1	D2356-042	STEP ASSEMBLY (LOW-SHORT, RH)
1	1	1	1	D2230-1	MOUNTING LUG
1	1	1	1	D2230-3	MOUNTING LUG
1	1	1	1	D2856-400-720	ABRASION STRIP
2	2	2	2	AN3-37A	BOLT
3	3	3	3	AN4-13A	BOLT
4	4	4	4	AN960JD10	WASHER
6	6	6	6	AN960JD416	WASHER
2	2	2	2	MS21042L3	NUT
3	3	3	3	MS21042L4	NUT

• COPYRIGHT © 1993 BY DART AEROSPACE LTD •
THIS DOCUMENT IS PRIVATE AND CONFIDENTIAL AND IS SUPPLIED ON THE EXPRESS CONDITION THAT IT IS NOT TO BE USED FOR ANY PURPOSE OR COPIED OR COMMUNICATED TO ANY OTHER PERSON WITHOUT WRITTEN PERMISSION FROM DART AEROSPACE LTD.

REFERENCE ONL

8

DART SERVICE INSTRUCTION

TO AMEND INSTALLATION INSTRUCTIONS D350-591 REV. G OR EARLIER
AND
INSTRUCTIONS OF CONTINUED AIRWORTHINESS ICA-D350-591 REV. 2 OR EARLIER

REF CANADIAN STC: SH92-6
REF FAA STC: SH967NE

For D350-591-121/-122/-123/-124/-133 steps, customers have the option of installing D2732-030 cushions under the D2230-1/-3 clamps to accommodate varying crosstube diameters and to improve fit. It is also acceptable to use longer or shorter AN4 bolts, and/or extra AN960JD416 washers under the nut to ensure 1.5 to 4 threads in safety. See Figure 1 on sheet 2 of this service instruction for reference.

For D350-591-121/-122 steps at CHG 005, D350-591-123/-124 steps at CHG 004, and D350-591-133 steps at CHG 003, the parts list of D350-591 Rev. G and ICA-D350-591 Rev. 2 is amended as follows:

ADD:

Qty -121	Qty -122	Qty -123	Qty -124	Qty -133	Part Number	Description
X					D350-591-121	***Heli-Access-Step*** ™, Short Step – High Skid, LH
	X				D350-591-122	***Heli-Access-Step*** ™, Short Step – High Skid, RH
		X			D350-591-123	***Heli-Access-Step*** ™, Short Step – Low Skid, LH
			X		D350-591-124	***Heli-Access-Step*** ™, Short Step – Low Skid, RH
				X	D350-591-133	***Heli-Access-Step*** ™, Aft Maintenance Step
2	2	2	2	8	D2732-030	CUSHION
2	2	2	2	8	AN4-16A	BOLT

The DSI-9459-011 kit is available for customers with earlier model D350-591-121/-122/-123/-124 steps. Longer AN4 bolts are provided to fasten the clamps. The DSI-9459-013 kit is available for customers with earlier model D350-591-133 steps.

Qty -011	Qty -013	Part Number	Description
X		DSI-9459-011	Rubber Cushion Kit (for -121/-122/-123/-124 steps)
	X	DSI-9459-013	Rubber Cushion Kit (for -133 steps)
2	8	D2732-030	CUSHION
2	8	AN4-16A	BOLT

CANADA
DEPARTMENT OF TRANSPORT
AIRCRAFT CERTIFICATION
BRANCH
DAO # 01-O-01

APPROVED
BY: D. SHEPHERD (DE # 02)
DATE: 09.06.24
CERT. NO.: SH92-6
ISSUE NO.: 11

REV.	DESCRIPTION	BY	DATE
B	AN4-16A WAS -17A FOR -013/-133 KIT	CP	09.06.24
A	NEW ISSUE	CP	09.04.17

DESIGN	GP	**DART AEROSPACE LTD** HAWKESBURY, ONTARIO, CANADA
DRAWN	GP	
CHECKED	PH	DRAWING NO. REV. B
MFG. APPR.	N/A	DSI 9459 SHEET 1 OF 2
APPROVED		TITLE SCALE
DE APPR.		OPTIONAL CLAMP MODIFICATIONS NTS
DATE	09.06.24	

COPYRIGHT © 2009 BY DART AEROSPACE LTD
THIS DOCUMENT IS PRIVATE AND CONFIDENTIAL AND IS SUPPLIED ON THE EXPRESS CONDITION THAT IT IS NOT TO BE USED FOR ANY PURPOSE OR COPIED OR COMMUNICATED TO ANY OTHER PERSON WITHOUT WRITTEN PERMISSION FROM DART AEROSPACE LTD.